NATIONAL PHYSICAL LABORATORY

Notes on Applied Science
No. 9

MEASUREMENT OF PRESSURE WITH THE MERCURY BAROMETER

1900

DEPARTMENT OF
SCIENTIFIC AND INDUSTRIAL RESEARCH

CAL LABORATORY

Notes on Applied Science
No. 9

Measurement of Pressure with the Mercury Barometer

LONDON
HER MAJESTY'S STATIONERY OFFICE

PREFACE

The series of *Notes on Applied Science* is published by the National Physical Laboratory to provide industrialists and technologists with information on various scientific and technical subjects which is not readily available elsewhere. The experience of the Laboratory has indicated a number of subjects on which short monographs would be of value, and a list of those already published is given at the back of this book.

Further information, or advice on specific questions, can be obtained by writing to the Director of the Laboratory.

The scientific work of the Laboratory is made generally known through the contributions which are made to learned societies, etc., and which appear in their journals. Details of these papers are contained in the Quarterly List of Papers Published. Application to be placed on the mailing list to receive, free, the Quarterly List and the List of N.P.L. Publications should be made to the Laboratory.

NATIONAL PHYSICAL LABORATORY
TEDDINGTON, MIDDLESEX
1962

1st Edition, 1955
2nd Impression with amendments, 1962

CONTENTS

APPENDIX

In these Notes barometric pressures are mainly expressed in terms of the millibar, the unit which, by international agreement, is strongly preferred for this purpose.

1000 *mb* = 750 *mmHg* = 29·5 *inHg approximately*

Accurate equivalents are given on p. 3.

The abbreviation 'torr' is being increasingly used to denote the millimeter of mercury pressure. Internationally 1 torr is 1/760 of one standard atmosphere 1 013 250 dyn/cm^2*; it is thus not exactly equal to 1 mmHg (see p.3), the difference being 1 part in 7 million.*

INTRODUCTION

THESE NOTES have been written to assist those workers in industry and research establishments who wish to measure gas pressures by means of a mercury column. The Notes deal mainly with the use of the mercury barometer, *i.e.* an instrument designed to measure the absolute magnitude of pressure, but the information given will, in general, apply equally to the mercury manometer, *i.e.* an instrument designed to measure the excess or deficiency of a pressure relative to some other pressure.

The range of pressures considered will be approximately 0 to 1200 millibars (0 to 900 millimetres of mercury) and it is assumed that the accuracy required is not better than about ±0·2 millibar. To obtain higher accuracy than this special precautions and techniques are necessary, and it may be advisable to seek the advice of the Standards Division of the N.P.L.

It is outside the scope of these Notes to give details of manufacture and manufacturing techniques relating to mercury barometers or to deal with scales of altitude such as are marked on certain mercury barometers to serve as the basis of calibration of aircraft altimeters. Nor are these Notes intended for meteorological work.

FUNDAMENTAL CONSIDERATIONS

Primarily, the mercury barometer or manometer measures h in the hydrostatic equation

$$p_1 - p_2 = \rho g h$$

where (*fig.* 1)

p_1 and p_2 are the pressures (force per unit area) acting on the mercury surfaces,

ρ is the density of the mercury,

g is the value of gravity acting on the mercury, and

h is the vertical distance between the mercury surfaces.

In the barometer, p_2 is nominally zero and the equation becomes $p = \rho g h$. Since ρ and g vary little compared with h it has become customary to regard the height of the mercury column as an indication of the pressure. However, ρ changes by about 1 part in 5500 per degC and g varies over the Earth's surface by about 1 in 200. Consequently in all but rough work ρ and g must be stated or implied. It is not usual or convenient to give ρ directly, but instead the temperature of the mercury is stated. Further, for convenience of comparison of experimental data, etc., barometric pressures are expressed, through *correction** of the barometer reading, in terms of the height of the equivalent column

---

*This process has often been referred to as "reduction", a term which should be avoided in this connexion because of the possibility of confusion with the process, in meteorological practice, of making allowance for the pressure difference corresponding to a hypothetical column of air between the barometer and a place at some other level vertically above or below it.

of mercury under recognized standard values of temperature and gravity rather than in terms of the values prevailing at the time and place of observation.

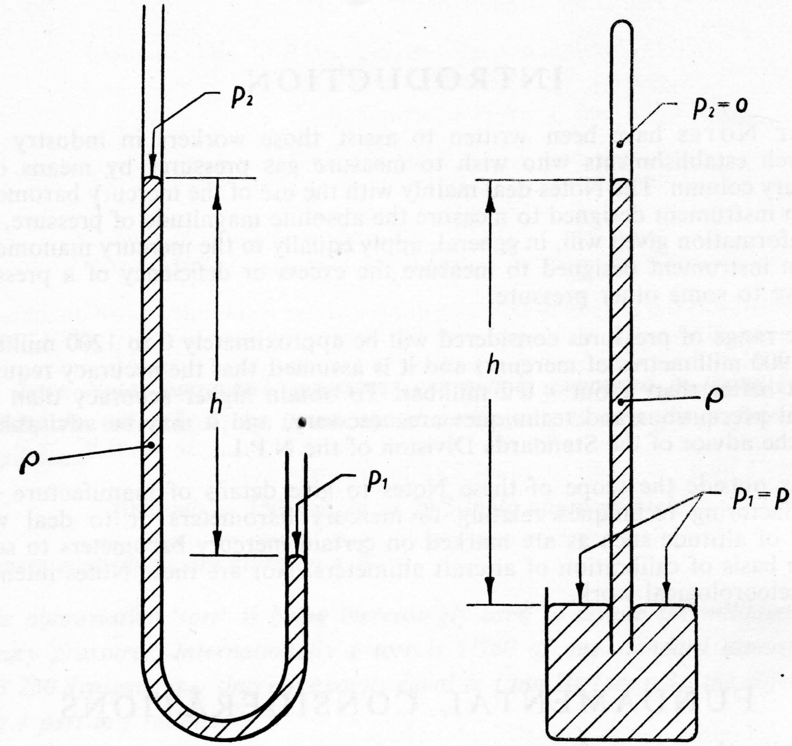

Manometer

$p_1=\rho gh+p_2$

Barometer

$p=\rho gh$

FIG. 1. The fundamental hydrostatic equation applied to a manometer and a barometer

It will be appreciated that a statement of the height of the mercury column, even when associated with an indication of the density of the mercury and the value of gravity, is not an expression of pressure in the basic terms of force per unit area. Early in this century the advantages of expressing barometric pressures in such basic terms were realized, and the use of the millibar, equal to 1000 dynes per square centimetre, was fostered, particularly in meteorological services. Scales of millibars are now widely used on barometers, and by a decision of the World Meteorological Organization (W.M.O.) the millibar is strongly preferred for the expression of barometric pressures. The same proposal was favourably received by the committee of the International Organization for Standardization (I.S.O.) concerned with Quantities, Symbols, Units and Conversion Tables, and was adopted in British Standard 2520:1954 Barometer Conventions and Tables (*ref. 1*).

Apart from the dyne per square centimetre (dyn/cm²) the following three pressure units only are recognized, on international authority, for the expression of barometric pressures.

BAROMETRIC PRESSURE UNITS

(*i*) *The millibar, (mb), equal to* 1000 *dyn/cm*^{2}.
This is the strongly preferred unit.

(*ii*) *The millimetre of mercury at* 0°C *and standard gravity,* 980·665 *cm/s*^{2}, *(mmHg).*
This unit is preferred to unit (iii).

(*iii*) *The inch of mercury at* 0°C *and standard gravity,* 980·665 *cm/s*^{2}, *(inHg).*

By "mercury at 0°C*" is meant a hypothetical fluid having an invariable density of exactly* 13·5951 *g/cm*^{3}.

The value of the density of mercury quoted above is intended as an unchanging conventional value. It also represents the density of pure mercury at 0°C under 760 mmHg pressure extremely closely. The association of a specific value of the density of mercury with the units (ii) and (iii) renders the definitions precise and establishes exact relationships between all three units. To the number of significant figures shown below, these are as follows. (As in B.S. 2520, the length "1 inch" is taken to equal 25·4 millimetres exactly.)

Relationships between barometric pressure units

Pressure unit		mb	mmHg	inHg
1 mb	=	1	0·750 062	0·029 530 0
1 mmHg	=	1·333 224	1	0·039 370 1
1 inHg	=	33·863 9	25·4 exactly	1

Attention is drawn to the standard forms of the symbols for the three units, as quoted above, namely, mb, mmHg and inHg. These are the same in the singular and plural; thus, for example, both "millibar" and "millibars" are represented by "mb" without an "s". It should be noted that no full stop is associated with any symbol.

Formerly it was not clear whether the millimetre and inch scales were to be regarded as scales of pressure (as they are on aneroid barometers, for example) or as scales of length set up to measure the height of the mercury column. The millibar scale has been free from such doubt as the millibar is an absolute pressure unit. With the exclusive adoption of these three units (mb, mmHg and inHg) it was decided internationally to regard all three scales as pressure scales giving readings in the respective authorized pressure units.

It has been seen that the height of the mercury column is dependent on temperature and gravity. It will be evident, therefore, that the indications of mercury barometers bearing pressure scales (mb, mmHg, inHg) will be correspondingly affected. Further, since the material (brass by general convention) on which the scale is ruled expands and contracts with changes in temperature, the barometer reading will depend on the scale temperature also. A mercury barometer, therefore, will indicate pressures correctly in the chosen pressure units only when the whole instrument is under certain conditions of temperature and gravity. These are referred to as the *standard instrumental conditions*. Great advantages arise if these conditions are the same as those associated with the accepted pressure units and therefore the following conditions were also internationally agreed.

STANDARD INSTRUMENTAL CONDITIONS

> *Mercury barometers bearing scales representing millibars, millimetres of mercury or inches of mercury, shall measure pressures directly in the appropriate units as defined above, when the whole barometer is at* 0°*C and subject to standard gravity*, 980·665 *cm/s*^{2}.

The adoption of the units and standard instrumental conditions defined above removed the sources of confusion and liability to error associated with the varied conventions which had previously governed mercury barometry. Fuller details will be found in B.S. 2520 (*ref. 1*).

TYPES OF BAROMETER

Mercury barometers fall broadly into two categories.

The Fortin barometer (*fig. 2*) is the most commonly used instrument of the type in which settings are made on both the base and the summit of the barometric column. An essential feature of its design is that, before taking a reading, the level of the lower mercury surface is brought up to the tip of a fiducial point, securely fixed in the roof of the cistern and corresponding with the zero of the scale of the instrument. This adjustment is achieved by means of a screw which, acting on a leather bag forming the lower part of the cistern, raises the mercury.

The simple U-tube manometer is another example of this category, provided that both limbs are read against the scale.

Barometer readings may be more readily obtained from the Kew type or "fixed cistern" barometer (*fig. 3*), which yields direct indications by means of a single setting on the summit of the column. The small variations in the level of the mercury in the cistern, which are proportional to the changes in the height of the mercury column, are automatically allowed for by using a contracted but linearly divided scale, the amount of the contraction being fixed by the effective cross sectional areas of the tube and cistern. In practice, the length of a unit division on the scale of a Kew barometer is not usually less than 0·95 of the length of the corresponding division on the scale of a Fortin barometer.

A significant difference between these two types of barometer should be noted. Whereas the reading of a Fortin barometer is independent of the quantity of mercury in the instrument, this is not so for a Kew barometer. It follows that the error of the latter type can be adjusted, within limits, very simply by adding or subtracting mercury. It also follows that Kew barometers respond to the change in volume of mercury with temperature and this type of barometer therefore has a different temperature coefficient from that of the Fortin type.

CHOICE OF BAROMETER

Consideration must first be given to the choice of a suitable bore of tube because, owing to depression of the mercury column due to capillary action, the accuracy obtainable depends on the bore of the tube irrespective of the type of barometer. In a narrow tube the capillary depression depends considerably on the angle of contact of the mercury surface with the glass; this angle varies, for example, according to whether the column is advancing or retreating along the tube. The differences in capillary depression likely to occur from time to time in tubes of different bore are illustrated in the following table (*ref. 2*). In this table the capillary depression is related to the height of the meniscus (*i.e.* the height of its crest above the ring of contact with the tube) instead of the angle of contact with which it is associated. Meniscus heights varying between the two values given are quite likely to be experienced, and greater variation is by no means unusual.

Capillary depression in barometer tubes of various diameters

Meniscus height (mm)	Bore of tube (mm)				
	6	8	10	12	14
1·2	1·69 mb	0·89 mb	0·50 mb	0·29 mb	0·17 mb
0·8	1·25	0·64	0·35	0·20	0·12
Difference in capillary depression	0·44	0·25	0·15	0·09	0·05

It is evident from this table that variations in excess of ±0·1 mb may arise if the bore of the tube is less than 10 mm. However, in view of the appreciable increase in cost of the barometer with increase in bore, it is fortunate that for many laboratory purposes an 8 mm bore may be regarded as satisfactory.

The significance of capillary depression is often overlooked when a temporary manometer is set up. Such apparatus often consists of a U-tube with millimetre graph paper behind it and for some purposes is not to be despised. However, needless errors are incurred through using 3 or 4 mm tube when a 6 mm tube would ensure that capillary errors do not exceed the errors inherent in the crudity of the method. It is often accepted that with two limbs of equal bore the separate capillary depressions will cancel one another. It should be evident that this is only true if the two menisci are of equal height. In practice, one meniscus will have risen to its position of reading and will tend to bulge and the other will have fallen and tend to flatten. The difference in the capillary depressions in the two limbs will, therefore, approach a value associated with the limits of stability of the angle of contact. If the upper meniscus is the more developed, the observed column height will have been reduced by this difference in capillary depression. Alternatively, if the change in pressure has been effected in the opposite direction and the lower meniscus is the more developed, the column height will have been increased by the difference in the depressions in the two limbs. Consequently, the variation in column height due to capillarity is likely to be greater in a U-tube than in a single tube of the same bore dipping into a cistern large enough for capillary depression to be negligible. An adequate tube bore should therefore be chosen for the working sections of a U-tube although these may be connected by a tube of smaller diameter without impairing the accuracy.

Considering the relative merits of the two types of barometer, a Fortin barometer of large bore is preferred if the highest accuracy is required. This advantage is due to the fact that, as the Kew barometer is sensitive to the volume of mercury in it, errors arise on account of changes in the volume of the meniscus in the cistern due to variations in meniscus shape. This effect is quite distinct from the variation of capillary depression in the cistern, which may be regarded as the same in Kew and Fortin instruments of the same cistern diameter.

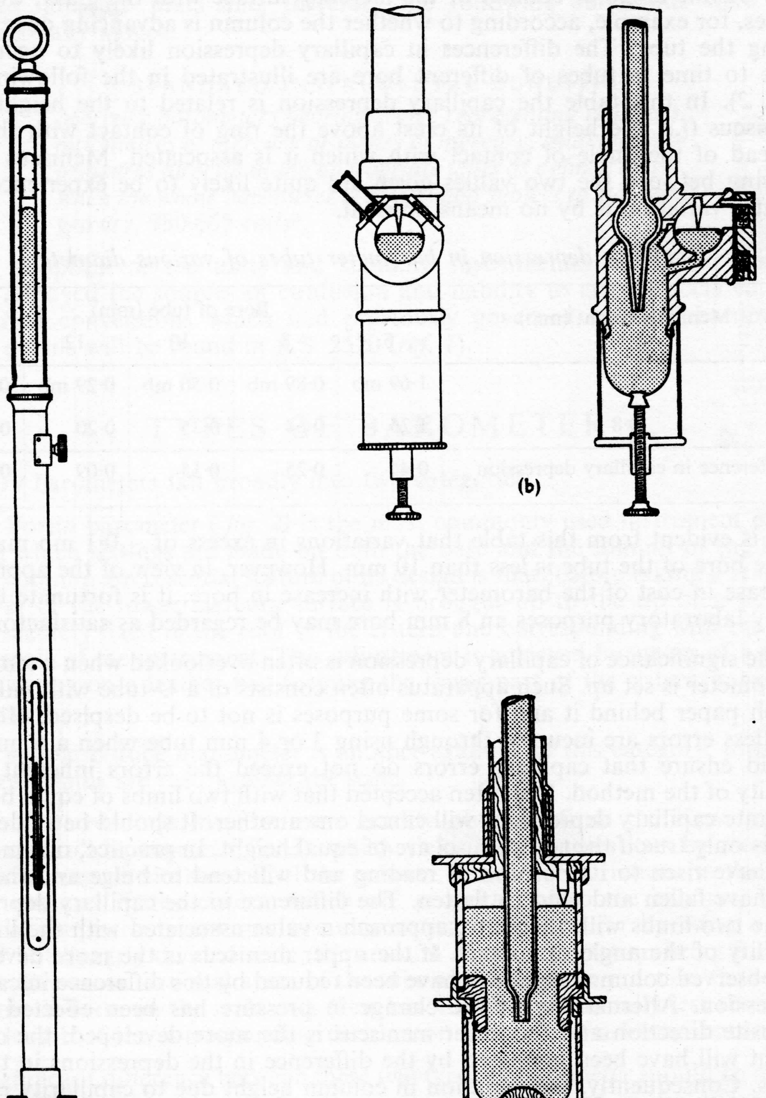

FIG. 2. Fortin type barometer (diagrammatic)

(a) Basic form of barometer, together with cistern in section.

b) A patented form of cistern.

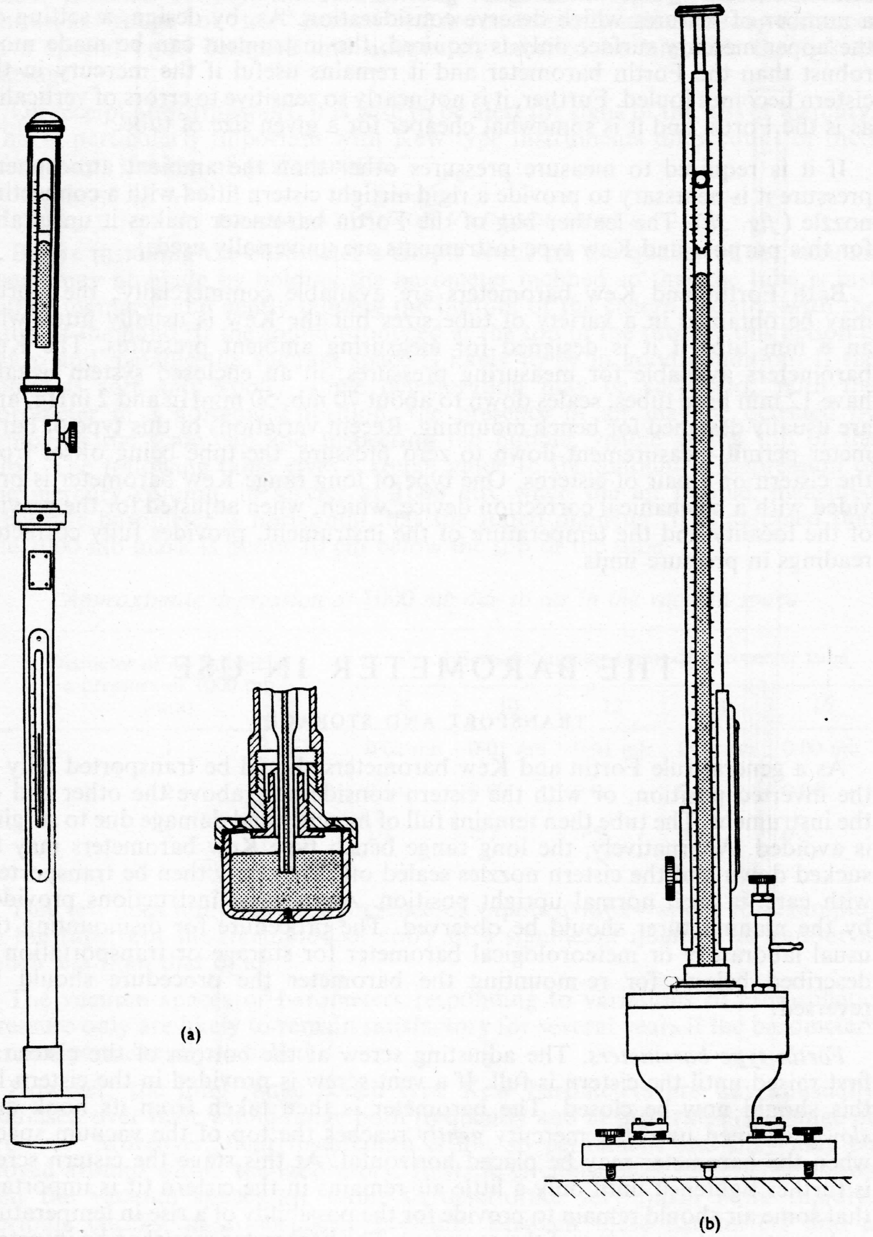

FIG. 3. Kew type barometers (diagrammatic). In meteorology the pattern (*a*) is almost exclusively employed, and when used at sea the movement of the mercury is damped by a constriction in the tube. The pattern (*b*) is adapted for measuring pressures in an enclosed system. Variations of this type of barometer having offset cisterns permit the measurement of pressures down to zero.

However, provided the barometer is tapped before reading (*see p. 11*), this effect seldom exceeds ±0·05 mb and, for general use, the Kew barometer possesses a number of features which deserve consideration. As, by design, a setting on the upper mercury surface only is required, the instrument can be made more robust than the Fortin barometer and it remains useful if the mercury in the cistern becomes fouled. Further, it is not nearly so sensitive to errors of verticality as is the Fortin and it is somewhat cheaper for a given size of tube.

If it is required to measure pressures other than the ambient atmospheric pressure it is necessary to provide a rigid airtight cistern fitted with a connecting nozzle (*fig. 3b*). The leather bag of the Fortin barometer makes it unsuitable for this purpose and Kew type instruments are universally used.

Both Fortin and Kew barometers are available commercially; the Fortin may be obtained in a variety of tube sizes but the Kew is usually fitted with an 8 mm tube if it is designed for measuring ambient pressures. The Kew barometers available for measuring pressures, in an enclosed system usually have 12 mm bore tubes, scales down to about 70 mb, 50 mmHg and 2 inHg, and are usually designed for bench mounting. Recent variations of this type of barometer permit measurement down to zero pressure, the tube being offset from the cistern or a pair of cisterns. One type of long range Kew barometer is provided with a mechanical correction device, which, when adjusted for the gravity of the locality and the temperature of the instrument, provides fully corrected readings in pressure units.

THE BAROMETER IN USE

TRANSPORT AND STORAGE

As a general rule Fortin and Kew barometers should be transported only in the inverted position, or with the cistern considerably above the other end of the instrument. The tube then remains full of mercury and damage due to surging is avoided. Alternatively, the long range bench type Kew barometers may be sucked down and the cistern nozzles sealed off. They may then be transported, with care, in their normal upright position. Any special instructions provided by the manufacturer should be observed. The procedure for dismounting the usual laboratory or meteorological barometer for storage or transportation is described below; for re-mounting the barometer the procedure should be reversed.

Fortin type barometers. The adjusting screw at the bottom of the cistern is first raised until the cistern is full. If a vent screw is provided in the cistern lid this should now be closed. The barometer is then taken from its hook and *slowly* inclined until the mercury *gently* reaches the top of the vacuum space, when the barometer may be placed horizontal. At this stage the cistern screw is further tightened until only a little air remains in the cistern (it is important that some air should remain to provide for the possibility of a rise in temperature and consequent expansion of the mercury). The barometer may then be inverted.

Kew type barometers. The vent screw, if provided, should be closed. The barometer should be *slowly* inclined until the mercury *gently* reaches the top of the tube. The barometer can then be placed horizontal, or inverted, as desired.

There is little likelihood of air entering the tube as a result of inverting or re-erecting these barometers unless the instrument is old and the cistern is foul.

On account of their vulnerability, mercury barometers are usually transported under personal convoy, except that long range Kew type instruments (often known as "gauge" or "test" barometers) are customarily sent over long distances in a special crate designed and adequately labelled to minimize the risk of damage.

On receipt after transport, it is wise to be alert for signs of the loss of mercury. This is particularly important with Kew type instruments on account of their consequent change of performance.

EXAMINATION OF VACUUM SPACE

Before installing the barometer a simple check on the quality of the vacuum space may be made by holding the barometer inclined so that the tube is just full of mercury, and gently tapping the bottom of the cistern, axially, with the palm of the hand. If the sound produced at the top of the tube by this action is sharp and metallic the vacuum space is likely to be in good condition. If the sound is soft and woolly, some deterioration may be suspected. With the barometer in a horizontal position, the presence of air may be detected by removing the scale cap and inspecting the bubble, visible at the top of the tube. The following table gives a rough guide to the amount of depression of the mercury column, in service at 1000 mb, when the air bubble, measured when the barometer is horizontal, has the stated diameter. It is assumed that the 1000 mb mark is about 10 cm below the top of the tube.

Approximate depression at 1000 *mb due to air in the vacuum space*

Diameter of air bubble at a pressure of 1000 mb (mm)	Internal diameter (mm) of barometer tube				
	8	10	12	14	16
1	0·02 mb	0·01 mb	0·01 mb	0·01 mb	0·00 mb
2	0·14	0·09	0·06	0·04	0·03
4	1·1	0·7	0·5	0·4	0·3

This test does not detect the presence of vapour (water-vapour for example) in the tube, but the likelihood of entry of a significant quantity of vapour is much less than that of air.

The vacuum spaces of barometers responding to variations of atmospheric pressure only are likely to remain satisfactory for several years if the barometers remain permanently installed.

However, the long range bench type Kew barometers are not unusually exercised over their whole range both frequently and at high rates of change of pressure. Moreover, their installation is not so permanent and they may be moved around within the laboratory. In these circumstances, experience shows that the vacuum spaces are liable to deteriorate very much more rapidly. Periodic checks, at atmospheric pressure, between these barometers and a permanently installed Fortin or short range Kew barometer is, accordingly, recommended. Advice on bubble examination and the assessment of depression in these long range barometers can be given by the N.P.L. upon request.

INSTALLATION

In choosing the position for setting up a barometer it is most important that the temperature conditions at the proposed site be carefully examined. At a pressure of 1000 mb a barometer reading changes by about 0·16 mb for 1degC change in temperature. Since the thermometer attached to the barometer only gives the temperature at a restricted part of the column it is evident that significant errors can be incurred through excessive vertical temperature gradients. These are often larger than is suspected. Though the thermometer is usually situated with its bulb about half way up the mercury column, because it is then more likely to take up the mean temperature of the column than if it were placed, for example, in the mercury in the cistern, a barometer should nevertheless be mounted where temperature conditions are likely to be uniform. It is also desirable that the rate of change of temperature with time should be small. The thermal time constant (*fig. 4*) of the mercury column of an ordinary

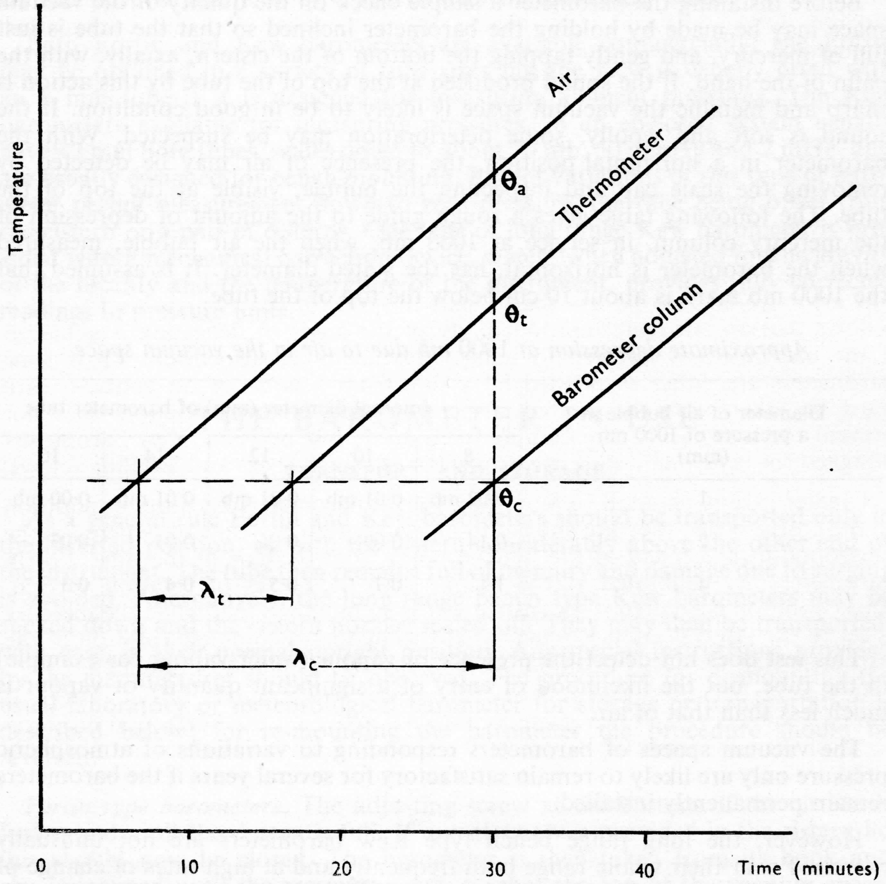

FIG. 4. Relation, for steadily changing temperatures in stagnant air, between rate of change of temperature, thermal time constants and temperature differences.

λ_c = thermal time constant of the mercury column.

λ_t = thermal time constant of the thermometer, the bulb of which is within the barometer scale tube.

θ_a = temperature of the air.

θ_t = temperature indicated by the thermometer.

θ_c = temperature of the mercury column.

$$d\theta_a/dt = d\theta_t/dt = d\theta_c/dt = K$$

$$\theta_t - \theta_c = K(\lambda_c - \lambda_t) \text{ . . . } (\textit{ref. } 3)$$

barometer is 20 or 30 minutes and that of the bulb of its attached thermometer, enclosed within the scale tube, is perhaps 10 minutes. Excessive rates of rise or fall in temperature are therefore liable to cause a difference between the temperature indicated by the thermometer and the actual temperature of the mercury column. Errors from both these sources can be largely avoided if the barometer is mounted away from radiators, frequently used doors and direct sunlight. Enclosing the instrument in a glazed case helps to reduce the effects of draughts and the presence of the observer's body.

The cursor of a barometer is set to the mercury meniscus by eye and therefore the lighting conditions should be such that this setting can be made without strain. Good diffuse general room lighting is desirable and it is necessary to provide diffuse artificial light behind the barometer. A white background illuminated by a small hand lamp held by the observer is most satisfactory. This enables the observer to adjust the intensity of the back lighting to suit himself having regard to the prevailing intensity of the room lighting.

Since in the equation $p = \rho gh$, h is the vertical height of the column, ideally a barometer should be mounted so that its scale is vertical. In practice however it is sufficient if the instrument is used mounted in the same attitude as when calibrated. When an accurate Kew barometer is deflected from the vertical through a small angle $\Delta\phi$ the error of the new reading R, ignoring smaller errors due to the tilt of the cursor and the changed meniscus form, is $R(1—\cos \Delta\phi)$. The error would thus be less than 1 part in 6000 for $\Delta\phi$ as great as 1°, and it follows that an adequate reproducibility of the angle of deflection is achieved if the instrument is allowed to hang freely from its suspension. Most Kew barometers are either suspended by a ring from a hook or on gimbals; care must be taken with the gimbal suspension that excessive friction does not prevent the barometer from coming freely to its rest position. Kew barometers designed for bench mounting are provided with spirit levels and levelling screws.

Greater care is required in mounting Fortin barometers because, in addition to the cosine error, they are subject to an error given by $l \sin \Delta\phi$, where l is the horizontal displacement of the fiducial point from the axis of the tube. Fortin barometers are calibrated at the N.P.L. with their axes of rotation vertical. This condition is secured if the instrument is so mounted that when the mercury is set to the fiducial point it remains set throughout a complete rotation of the barometer. In service, Fortin barometers should be similarly mounted.

It should be noted that a Kew barometer with a single off-set cistern is similarly subject to an error given by $l \sin \Delta\phi$ where l is the horizontal displacement of the tube from the centre of the cistern. Such barometers are normally fitted with more sensitive spirit levels and require more careful levelling.

OBSERVATIONAL PROCEDURE

Since the presence of the observer's body influences the thermometer more rapidly than it does the mercury column it is desirable first to read the barometer thermometer. If the barometer is of the Fortin type the mercury in the cistern should then be raised nearly to the pointer.

If the pressure has been slowly changing, the meniscus may have developed an angle of contact well beyond the limits of full stability. The barometer should, therefore, next be tapped so as to avoid excessive errors due to capillary depression. The tapping should be sufficiently vigorous that the meniscus in the tube is visibly disturbed; it will then reform with a more nearly average meniscus height. For Kew barometers it should disturb the mercury in the cistern also, so as to dispel any unusual flatness or curvature of the surface of the cistern mercury.

The pointer setting of a Fortin barometer should next be completed by carefully raising the mercury in the cistern until the tip of the pointer and its reflexion in the mercury surface just meet. No depression of the mercury surface in the neighbourhood of the fiducial point should be visible.

Finally the setting of the cursor to the mercury meniscus is made by bringing the front and back setting edges of the cursor into line with the crest of the meniscus. To do this accurately it is essential for the observer to make repeated small vertical movements of the eye until he is satisfied that the required condition has been achieved. The reading of the vernier is straightforward and calls for no comment.

On completing an observation on a Fortin barometer the mercury should be lowered a few millimetres from the pointer. This will delay the fouling of the inner wall of the glass cistern in the region through which the pointer is observed.

CORRECTION OF READINGS

Index correction. A perfect barometer indicates the pressure correctly, in standard pressure units, when the barometer is under the standard instrumental conditions. In practice, a slight residual error of adjustment almost inevitably exists, and this is allowed for by applying at each point a correction, known as the *index correction*, obtained (in principle) by comparison with an instrument whose errors have been determined from first principles (*see figs. 5 and 6*).

These corrections, as given in an N.P.L. certificate, take account of the average capillarity conditions in both tube and cistern and represent mean values obtained with both increasing and decreasing pressures. (*See capillary depression etc., page 5*).

Temperature correction. The need for correcting barometer readings for the effect of variation of temperature on the length of the scale and on the density of the mercury has already been indicated. In practice these two effects are allowed for simultaneously. A comprehensive set of temperature correction tables is included in B.S. 2520 (*ref. 1*) to which reference may also be made for the formulae on which the corrections are based. The effect of a change in temperature on a barometer of the Fortin category is proportional to the reading of the barometer and to the difference between the coefficient of cubical expansion of the mercury and the linear expansion of the scale. As pointed out by Gould (*ref. 4*) the effect on a Kew type instrument is greater by a small quantity which (broadly) takes into account the relative change with temperature of the volumes of the mercury and the cistern. This quantity is independent of the barometer reading but is proportional to V/A, where V is the volume of mercury in the instrument and A is the horizontal cross sectional area of the cistern. Accordingly the temperature corrections applicable to Fortin barometers and to different designs of Kew barometer differ slightly. Certain Kew type barometers are fitted with correcting devices, operating on the distance between the setting edge and the cursor scale.

Gravity Correction. The correction of a barometer reading to correspond with standard gravity 980·665 cm/s^2 should be based on the local value of gravity. In practice, as local gravity has in many places not been measured, the appropriate barometric correction is usually made by reference to the latitude of the barometer (and the height above mean sea level if this is considerable); the value of gravity at mean sea level in latitude 45° is assumed together with the normal variation with latitude and height. This procedure takes no account of local gravity anomalies, but in the British Isles these anomalies only amount to as much as 0·1 cm/s^2 in Northern Ireland and west of Aberdeen, and for normal barometric accuracy the corrections to standard gravity based on latitude and height can be accepted. These corrections, together with full details of their derivations, may be found in B.S. 2520 (*ref. 1*).

Reduction of pressure from barometer level to another level. A barometer measures the pressure on its lower mercury surface. If the point where the pressure is required is above or below the level of this surface, then the hydrostatic effect of the intervening air column must be taken into account. This effect is bigger than is commonly realized; for instance, at normal sea level pressures the effect of a 3-foot difference in altitude is about 0·1 mb and an allowance of over 0·3 mb may have to be made if the barometer is on a different floor from the apparatus where a knowledge of the pressure is required. The allowance depends on the density of the air. When deducing the atmospheric pressure from that measured at a slightly different level, for example in a building, the following values per foot of air column may be used: 0·036 mb, 0·027 mmHg, or 0·0011 inHg. The greater the altitude, the less the pressure.

It should be realized that pressure anomalies are liable to arise inside buildings, due to internal air currents, air conditioning systems, etc. It is desirable, therefore, that the barometer should be installed within the room in which precise pressure measurements are required.

Example of the correction of barometer readings

Observational data

Fortin barometer with millibar scale

Thermometer reading	19·6°C
Barometer reading	992·4 mb
Location of barometer	Latitude 53°N, 650 ft above Mean Sea Level

Required

Pressure at a point 12 ft above the level of the cistern of the barometer.

Application of corrections

Thermometer reading	19·6°C	
Thermometer correction	+0·2	(*see* note 1)
∴Temperature	19·8°C	
Barometer reading	992·4 mb	
Index correction	–0·1	(*see* note 1)
Temperature correction	–3·20	(*see* note 2)
Gravity correction	+0·61	(*see* note 3)
∴Pressure at level of barometer cistern	989·71 mb	
Reduction to point 12 ft above barometer cistern	–0·43	(*see* note 4)
∴Required pressure at the point 12 ft above barometer cistern	989·28 mb	
Final rounded value	989·3 mb	

Note 1. Corrections from N.P.L. certificate.

2. Temperature correction to 0°C, from Table 5 of B.S. 2520. For a Kew type barometer (M.O. pattern) the corresponding correction from Table 9 would be − 3·45 mb.

3. Gravity correction to standard gravity, from Tables 17 and 21 (+0·67 − 0·06 = +0·61 mb)

4. Reduction of pressure to another level, from Table 22.

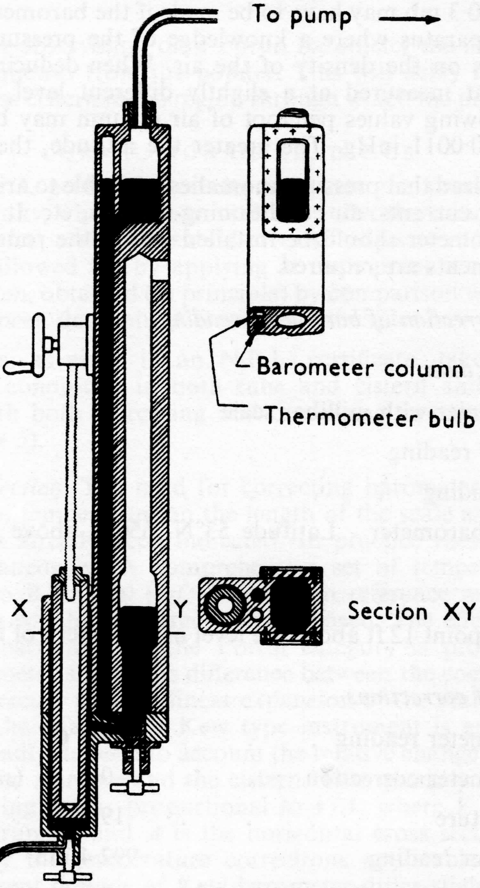

FIG. 5.(*a*) The N.P.L. primary standard barometer for pressures in the neighbourhood of 1000 mb (*ref. 5*). The mercury column is contained in a block of stainless steel and the mercury surfaces, large and flat, are viewed through optically flat and parallel windows. The vertical distance between them is measured by means of two micrometer microscopes which can be trained either on the mercury surfaces, or, after translation of the rigid supporting carriage, on a vertical line standard of invar to the right of the stainless steel block. The position of each mercury surface is identified by reference to the image of a horizontal cross wire formed just above it, and the reflection of this image in the mercury surface. The temperature of the mercury column is measured by thermocouples. Gravity has been determined locally to very high accuracy. The estimated uncertainty in the measurement of pressures of about 1000 mb is within 0·01 mb. (*See Photograph*)

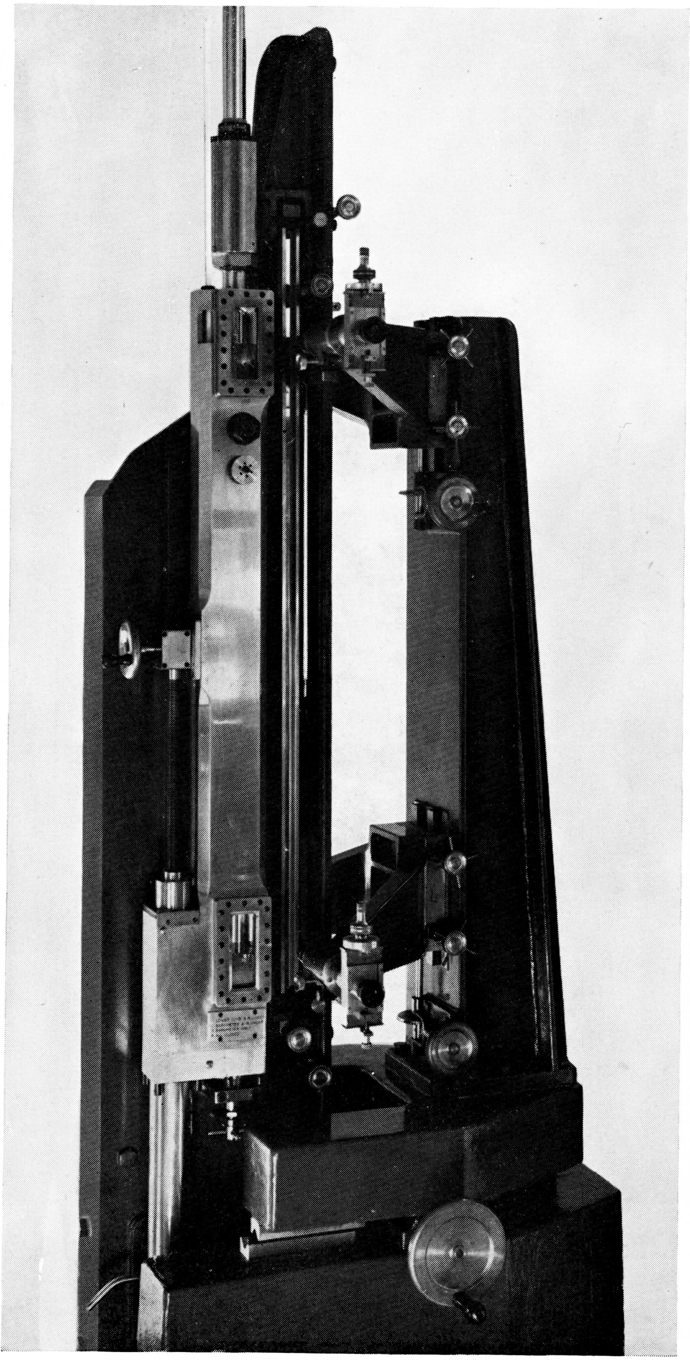

FIG. 5(*b*). The N.P.L. primary standard barometer (*ref. 5*).
(See description opposite)

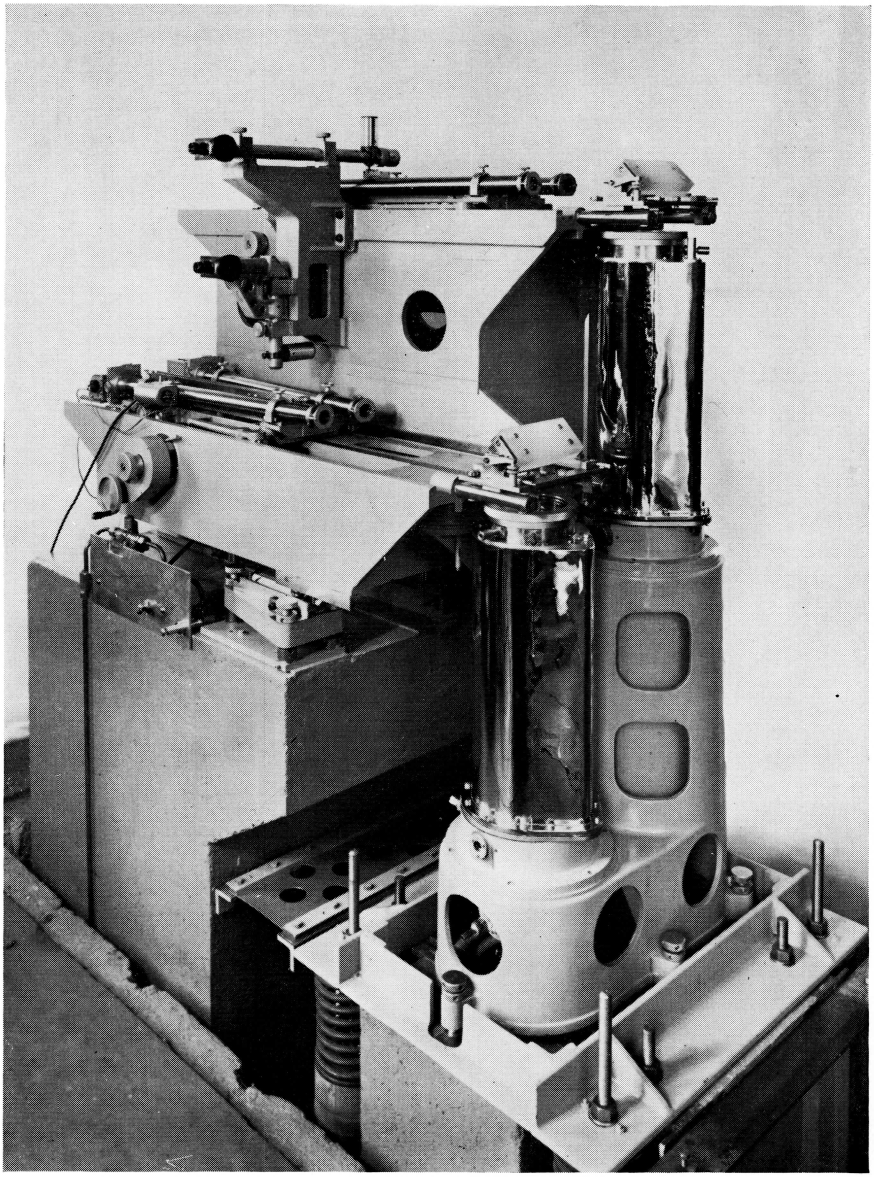

FIG. 6. The N.P.L. primary standard barometer of range 0 to 1200 mb (*ref. 6*). Special optical probes (*ref. 7*) assess from overhead the positions of 11-cm diameter mercury surfaces in the fully water-jacketed barometer U-tube. The two probes use a single mercury pool as a common reference surface and their movements are measured with associated invar line standards by means of fixed micrometer microscopes. The overall accuracy of a single pressure measurement is estimated to be about ±0·01 mb irrespective of pressure.

TESTING OF BAROMETERS AT N.P.L.

The N.P.L. undertakes the testing of mercury barometers. Details of the test made can be obtained on application to the Director, National Physical Laboratory, Teddington, Middlesex. There are advantages in arranging for the barometer to be submitted to the N.P.L. by the manufacturer or supplier for test, on purchase or repair, because of the hazards of transport.

After preliminary examination for general workmanship, etc., and for air in the vacuum space, the barometer is compared with a working standard barometer. The comparison of barometers (excluding those with air-tight cisterns) is carried out in a large chamber in which the pressure is adjusted to any desired atmospheric level and kept constant to well within ±0·01 mb by means of a barostat. When necessary, the working standard barometers are verified on the basis of comparison with one or other of the primary standard barometers (*refs. 5 and 6*), details of which are given in *figs. 5 and 6*.

APPENDIX

References

1. *British Standard* 2520: 1954. Barometer conventions and tables. British Standards Institution, London.

2. GOULD, F. A. and VICKERS, T. Capillary depression in mercury barometers and manometers. *J. sci. Instrum.*, 1952, **29**, 85.

3. EVANS, J. C. The determination of thermal lagging times. *Proc. Phys. Soc.*, 1947, **59**, 242.

4. GOULD, F. A. Barometers and manometers. *A Dictionary of Applied Physics.* Edited by Sir Richard Glazebrook, 1923, 3, 140. Macmillan & Co., Ltd., London.

5. SEARS, J. E. (jun.) and CLARK, J. S. A new primary barometer. *Proc. Roy. Soc.* (A) 1933, **139**, 130.

6. ELLIOTT, K. W. T., WILSON, D. C., MASON, F. C. P., and BIGG, P. H. Primary standard barometer of range 0 to 1200 mb. *J. sci. Instrum.*, 1960, **37**, 162.

7. ELLIOTT, K. W. T., and WILSON, D. C. An optical probe for the accurate measurement of the displacements of a reflecting surface. *J. sci. Instrum.*, 1957, **34**, 349.

Printed in England under the authority of Her Majesty's Stationery Office by
Longmans (Dorchester) Ltd., The Friary Press, Dorchester, Dorset.

4682 Wt. 3454 K12 1500 1/62 L (D) Ltd.

NOTES ON APPLIED SCIENCE

1. Gauging and measuring screw threads (1951)—3rd Edition 1958	6*s.* 0*d.* (6*s.* 7*d.*)
2. The industrial application of aerodynamic techniques (1952)	(out of print)
3. The properties of electrical insulating materials and methods of test (1953)—reprinted 1958	(out of print)
4. Measurement of humidity (1953)—3rd Edition 1958	1*s.* 9*d.* (2*s.* 1*d.*)
5. Gauge making and measuring (1954)—reprinted 1961	5*s.* 0*d.* (5*s.* 5*d.*)
6. Volumetric glassware—scientific aspects of design and accuracy (1954)—reprinted 1957	1*s.* 9*d.* (2*s.* 0*d.*)
7. Balances, weights and precise laboratory weighing (1954)—reprinted 1960	3*s.* 6*d.* (3*s.* 11*d.*)
8. Audio frequency power measurements (1954)—reprinted 1959	1*s.* 6*d.* (1*s.* 9*d.*)
9. Measurement of pressure with the mercury barometer	1*s.* 6*d.* (1*s.* 11*d.*)
10. Noise measurement techniques (1955)—reprinted 1961	3*s.* 6*d.* (3*s.* 10*d.*)
11. Wind effects on bridges and other flexible structures (1955)—reprinted 1961	3*s.* 0*d.* (3*s.* 4*d.*)
12. Calibration of temperature measuring instruments (1955)—2nd Edition 1957	2*s.* 6*d.* (2*s.* 10*d.*)
13. Standard capacitors and their accuracy in practice (1956)—reprinted 1961	1*s.* 3*d.* (1*s.* 6*d.*)
14. Photometry of telescopes and binoculars (1956)—reprinted 1957	2*s.* 0*d.* (2*s.* 4*d.*)
15. Application of spring strips to instrument design (1956)—reprinted 1960	2*s.* 0*d.* (2*s.* 4*d.*)
16. Modern computing methods (1956)—2nd Edition 1961	21*s.* 0*d.* (22*s.* 1*d.*)
17. High voltage impulse testing (1956)	1*s.* 6*d.* (1*s.* 9*d.*)
18. High voltage bridge measurements at power frequency (1957)	1*s.* 3*d.* (1*s.* 6*d.*)
19. Signal generators, attenuators, voltmeters and ammeters at radio frequencies (1958)	1*s.* 6*d.* (1*s.* 9*d.*)
20. Small-scale preparation of fine-grain (colloidal) photographic emulsions (1961)	1*s.* 6*d.* (1*s.* 9*d.*)
21. Measurement of load by elastic devices (1961)	3*s.* 0*d.* (3*s.* 4*d.*)
22. Capacitors, inductors and resistors at radio frequencies (1961)	1*s.* 9*d.* (2*s.* 1*d.*)
23. Radiometric standards and measurements (1961)	1*s.* 9*d.* (2*s.* 1*d.*)
24. Photometric standards and the unit of light (1961)	3*s.* 0*d.* (3*s.* 4*d.*)
25. Hydrometers and hydrometry (1961)	2*s.* 6*d.* (2*s.* 10*d.*)
26. Measurement of angle in engineering (1961)	3*s.* 0*d.* (3*s.* 4*d.*)
27. Inspection of gauging dimensions involving linear and angular measurements	In the press.
28. The measurement of frequency	In the press.
29. Physical photometry	In the press.
30. Use in industry of elasticity measurements in metals with the help of mechanical vibrations	In the press.
31. Schlieren methods	In the press.

OTHERS ARE BEING PREPARED

Prices in brackets include postage

Published by
HER MAJESTY'S STATIONERY OFFICE

To be purchased from
York House, Kingsway, London, W.C.2
423 Oxford Street, London, W.1
13A Castle Street, Edinburgh 2
109 St. Mary Street, Cardiff
39 King Street, Manchester 2
50 Fairfax Street, Bristol 1
35 Smallbrook, Ringway, Birmingham 5
80 Chichester Street, Belfast 1
or through any bookseller

Price 1*s.* 6*d.* net

S.O. Code No. 48-120-9-62